ENERGY TAPPING IDENTIFIER USING GSM

Project Report Submitted in Partial Fulfillment of the Requirements for the Award of Degree of

Bachelor of Technology
in
Electrical and Electronics Engineering

By

B. Nithish Kumar (Roll No.18B81A0284)
B. Sowmya (Roll No.18B81A02A2)
P. Ajay Kumar (Roll No.18B81A0262)
Y. Penny Venkat (Roll No.18B81A0287)

DEPARTMENT OF ELECTRICAL AND ELECTRONICS ENGINEERING

CVR COLLEGE OF ENGINEERING
(An UGC Autonomous Institution, Accredited by NBA & NAAC)
(Approved by AICTE & Govt. of Telangana and Affiliated to JNTU, Hyderabad)
Vastunagar, Mangalpalli (V), Ibrahimpatnam (M), R.R District.
Hyderabad 501 510

2022

CVR College of Engineering

(An UGC Autonomous Institution, Accredited by NBA & NAAC)

(Approved by AICTE & Govt. of Telangana and Affiliated to JNTU, Hyderabad)

Vastunagar, Mangalpalli (V), Ibrahimpatnam (M), R.R District.

Hyderabad 501 510

Department of Electrical and Electronics Engineering

Certificate

This is to certify that this project report entitled "**ENERGY TAPPING IDENTIFER USING GSM"** by **B. Nithish Kumar (Roll No. 18B81A0284), B. Sowmya (Roll No. 18B81A02A2), P. Ajay Kumar (Roll No. 18B81A0262) and Y. Penny Venkat (18B81A0287)** submitted in partial fulfillment of the requirement for the degree of Bachelor of Technology in Electrical and Electronics Engineering of the CVR College of Engineering, Hyderabad, during the academic year of 2021-22, is a bonafide record of the work carried out under our guidance and supervision.

The results embodied in this report have not been submitted to any other University or Institution for the award of any degree or diploma.

Mrs. V. Vimala Devi
(Senior Assistant Professor/EEE)
(Project Guide)

(External Examiner)

Dr. S. Venkateshwarlu
(Professor &HOD)

ACKNOWLEDGEMENT

We are thankful to **Dr. Raghava Cherabuddi, Ph.D., Chairman**, CVR College of Engineering for providing the best-of-class infrastructure, lab facilities and top-class faculty and providing us the best possible education.

We would like to convey our sincere thanks to **Dr. K. S. Nayanathara**, **Ph.D., Principal**, CVR College of Engineering for her continuous support and encouragement.

We are highly indebted and grateful to **Dr. S. Venkateshwarlu, Ph.D., Professor and Head of Electrical and Electronics Engineering Department** whose kind co-operation and valuable suggestion helped us in launching our project successfully.

We take the opportunity to express our deep sense of gratitude to our guide **Mrs. Vimala Devi M.E. (Ph.D), senior Assistant Professor, Department of Electrical and Electronics Engineering**, CVR College of Engineering, Hyderabad and for her continual guidance, constant encouragement, discussion and unceasing enthusiasm. We consider our self-privileged to have worked under her guidance.

We would like to express our heart full thanks to our **Project Coordinators Dr. D. Obulesu M.Tech., Associate Professor** & **Mr. K. S. V Phani Kumar M.Tech., (Ph.D.), senior Assistant Professor, EEE** for their valuable suggestions which helped us to finish our project in a good manner.

Our sincere thanks to Chief Project Coordinator **Dr. Ch. Lokeshwar Reddy, Ph.D., Professor**, **EEE.** All faculty Members & Staff of Electrical and Electronics Engineering for their constant encouragement, caring words, constructive criticism and suggestions towards the completion of this work successfully.

We are highly indebted to the parents and family members, whose sincere prayers, best wishes, moral support and encouragement have a constant source of assurance, guidance, strength and inspiration to us.

Last but not least we thank Almighty for his grace enabling us to complete this work on time.

B. Nithish Kumar _____

B. Sowmya _____

P. Ajay Kumar _____

Y. Penny Venkat _____

ABSTRACT

The purpose of this work is to provide an implementation methodology for electricity theft detection and controlling which allows violators to be detected at a remote area. It includes microcontroller based embedded technology and wireless communication method to find out the electric theft and transmission line fault. Moreover, collecting the meter readings for billing processes from all consumers is a difficult and time-consuming task which requires a great number of labors. In the proposed method a Global System for Mobile communication (GSM)based technology is used to transmit the meter reading and detection alert automatically to the authorized energy provider via an alert message which eliminates the various issues related to the meter reading and theft detection. The objective and motive of this project is to design a system in order to avoid the displeasure for the users from theft, bill irrespective of the use of the electricity due to theft. This project deals with theft control system in energy meter. To provide a solution over this, GSM is used to send the signal to the electricity board. The measuring of energy meter is done with a microcontroller. The informative system will be very helpful for the electricity board to monitor the entire supply and the correct billing accordingly without any mishap or inconvenience. This project reduces the manual manipulation work and theft control and this leads to precision regarding billing information.

TABLE OF CONTENTS

CHAPTER NO	TITLE	PAGE NO.
	ABSTRACT	iv
	LIST OF TABLES	vi
	LIST OF FIGURES	vii
	LIST OF ABBREVIATIONS	ix
1	**INTRODUCTION**	1
2	**LITERATURE REVIEW**	3
3	**OBJECTIVE**	4
4	**DESCRIPTION OF PROJECT**	5
	4.1 Block diagram	5
	4.2 Power supply block diagram	6
	4.3 Working	9
	4.4 Description of components	12
	4.5 Experimental setup	43
5	**RESULT AND DISSCUSION**	44
6	**CONCLUSION AND FUTURE SCOPE**	47
	APPENDICES & REFERENCES	48-51

LIST OF TABLES

TABLE NO	TITLE	PAGE NO.
4.1	Pins description of lcd	15-16
4.2	Command operation of lcd	16
4.3	Command list of lcd	17-18

LIST OF FIGURES

FIGURE NO.	TITLE	PAGE NO.
4.1	Block diagram of the system	5
4.2	Power supply block diagram	6
4.21	Regulated power supply	7
4.3	Circuit diagram of energy theft using GSM	11
4.4	Arduino uno ATmega328	12
4.5	Pin diagram of lcd	14
4.6	GSM module	19
4.61	GSM circuit	21
4.7	Watt-hour meter	22
4.71	Single phase electromechanical inductor energy meter	24
4.72	Energy meter circuit using microcontroller	25
4.8	Current sensor circuit	26
4.9	Load bulb	28

4.91	Relay	29
4.92	Experimental setup	43
5.1	Display of energy tapping identifier	44
5.2	Working of project	45
5.3	Billing and SMS alert during theft	46
6.1	Arduino AT mega 328 specifications	48
6.2	GSM 900 specifications	49
6.3	LCD 16*2 specifications	50

LIST OF ABBREVIATIONS

GSM - Global system for mobile communication

LCD - Liquid crystal display

RPS - Regulated power supply

Chapter 1

INTRODUCTION

Developing countries are facing acute problem of power theft and unorganized power management due to lack of sufficient and efficient past energy consumption data. This has led to huge losses to power companies or unbearable high electricity costs for customers. Smart Grid and its part, smart meter is efficient solution for this problem. The main parameter for smart metering is no need of human efforts and physical challenges. The technology should also be financially supportive. The wireless data transmission is very essential in the system. With the data collected automatically without human errors will be accurate compared to manual meter reading. So, the power generation estimation for future at power plants will be easy and precise. With the precise statistical data pricing scheme for different time and tariff schemes can be applied. This will avoid the situations like blackout and shortage of power. Here, our main goal is to study and analysis Smart Metering. Smart metering is analyzed based on how it can be established, how it works, which technologies are being used for communication and performance. Many rural areas in different parts of country are affected by the electricity outage problem due to the peak load time or suffers blackout when no sufficient power is available.

Electricity theft is a very common problem in country, where population is very high, and the use of electricity are ultimately tremendous. In India, every year there is very increasing number of electricity thefts across domestic electricity connection as well as industrial electricity supply, which results in loss of electricity companies' energy and because of which we are facing the frequent problems of load shading in urban as well as rural areas to overcome the need of electricity for whole state. Also, the ways using which theft can be done are innumerable so we can never keep track of how a theft has occurred, and this issue is needed to be solved as early as possible. In This abstract we propose an electricity theft detection system to detect the theft which is a made by the most common way of doing the theft and that is bypassing the meter using a piece of wire, people simply bypass electricity meter which is counting the current unit by placing a wire before and after the meter reading unit.

The proposed system will be hidden in such meter and as soon as an attempt is made for the theft, it will send SMS to control unit of electricity board. In this system current transformer are used, here one current transformer is placed in input side of the post line. Other current transformer is placed at the distribution points of the house lines. The output of CT values is given as input to PIC microcontroller convert analog inputs to digital. Then PIC compares the input current and the same of output current. If compared result has any negative values, then this post is detected as theft point. This compared value is transmitted to electricity board, this value display in LCD display.

Organization of Report

Chapter 1: Describes the introduction of energy Modelling and its advantages about the benefits of distributed generation and problems.

Chapter 2: Discussed about Literature survey and a brief history about the basics of project Modelling and then the problems faced during design are explained then various optimization techniques are studied and the drawbacks of their algorithm.

Chapter 3: Objectives are described and coordinated to project.

Chapter 4: Indicates the detail explanation and formulation of the energy theft modulation project.

Chapter 5: Describes the solution methodology that is the introduction of algorithm and conclusive results of project.

Chapter 6: Implements the design and functioning of energy tapping identifier.

Chapter 2

LITERATURE REVIEW

- **R Sathish states the idea of detection of power theft by using two current sensing parts one is Hall sensor and another one energy meter current measure current transducer.** The proposed system will deliver continuous real-time monitoring of energy utilization, minimum energy loss and power theft detection. this system the service provider can get the immediate knowledge about the energy theft and passing to the concerned energy theft detecting squad.

- **Siddhartha S. &Ayush B. states that losses due to power theft, experts say, are currently 29% of the total generation, which equals a shocking ₹45,000crore in the fiscal year 2009-10.** The system finds out the power theft by monitoring the total power consumption, receiving the delivered power data that includes data delivered to several users. Determining the amount of difference between them, thus finding out if power theft has occurred. But there lies no specific way to find out where the power theft has occurred.

- **Mr. Jain Abhinandan et al. develop of a complete Automated Energy Meter which has feature such as remote monitoring and energy meter controlling**. The AMR continuously observe and monitors the energy meter then sends meter reading to the service provider via SMS. The bill was allowed to pay online and option for payment by credit card or debit card or even by net banking. Using a GSM, automatic power meter reading was built to demonstrate an automatic power meter reading in this network. Meter reading may have lots of errors because of manual system.

Chapter 3

OBJECTIVE

Electrical power theft is a major problem in power system network all over the world, which is illegal and should be strictly prohibited. Power theft can be defined as the usage of the electrical power without any contract with the supplier. The electrical power theft detection system is used to detect unauthorized tapping on distribution lines. Implementation of a neighborhood of this system might be a distribution network of the electrical power supply system. The existing system isn't ready to identify the precise location of tapping. The objective and motive of this project is to design a system in order to avoid the displeasure for the users from theft, bill irrespective of the use of the electricity due to theft. This project deals with theft control system in energy meter. To provide a solution over this, GSM is used to send the signal to the electricity board. The measuring of energy meter is done with a microcontroller. The informative system will be very helpful for the electricity board to monitor the entire supply and the correct billing accordingly without any mishap or inconvenience. This project reduces the manual manipulation work and theft control and this leads to precision regarding billing information.

- Developing energy meter that informs consumption.
- Informing consumption via SMS.
- SMS alert through GSM to mobile about unauthorized tapping on lines.
- LCD display and buzzer alert during energy theft.
- Calculation's required should be provided for future expansion of power system .
- Units consumed in particular area need to recorded.

Chapter 4

DESCRIPTION OF PROJECT

4.1 Block Diagram:

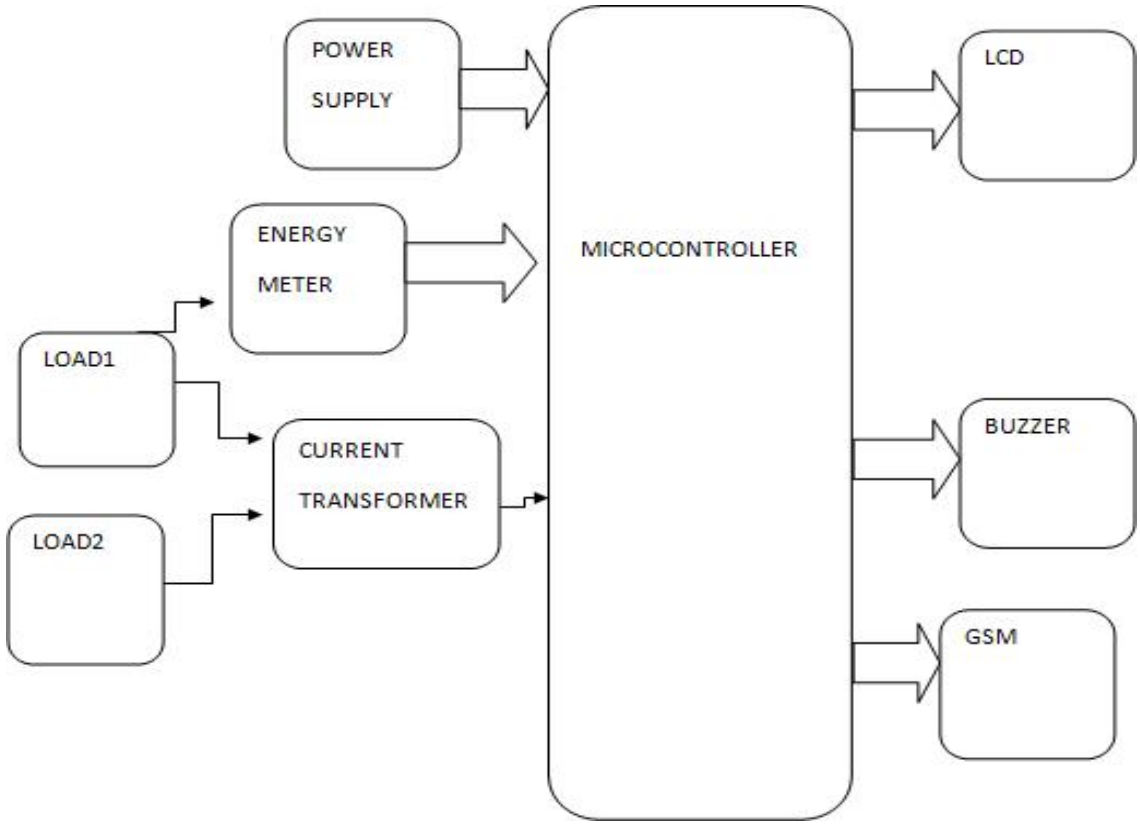

Fig.4.1. Block diagram of the system

4.2 Power Supply Block Diagram

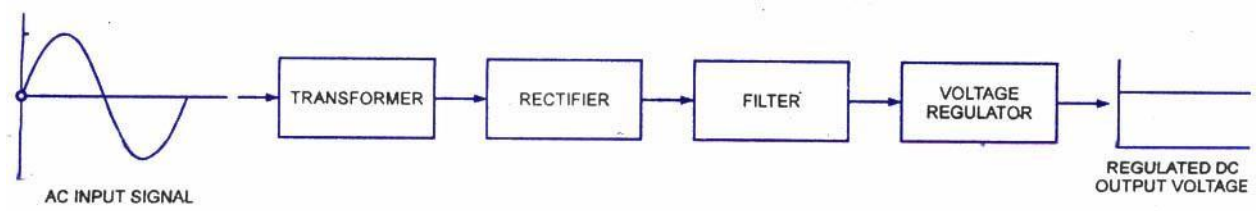

Fig. 4.2. Power supply block diagram

We know that there are different types of electrical & electronic circuits which use a DC power supply. Universally, we cannot use the DC batteries due to expensive as well as require replacement when discharged. In this situation, we require a circuit which can change AC supply to DC supply. A rectifier filter circuit includes a normal DC power supply. The normal DC power supply o/p remains stable if the load is contrast. Although in several electronic circuits it is extremely significant to maintain the DC power supply constant irrespective of alternative AC supply. Otherwise, the circuit will get damage. To overcome this problem, voltage regulating devices can be used. So, the blend of the voltage regulating devices by the normal dc power supply is named as DC regulated power supply. This is an electrical device, used to generate the steady DC supply irrespective of alternative AC supply.

4.21 Regulated Power Supply

The IC Regulated power supply (RPS) is one kind of electronic circuit, designed to provide the stable DC voltage of fixed value across load terminals irrespective of load variations. The main function of the regulated power supply is to convert an unregulated (AC) into steady state (DC). The RPS is used to confirm that if the input changes, then the output will be stable. This power supply is also called a linear power supply, and this will allow an AC input as well as provides steady DC output.

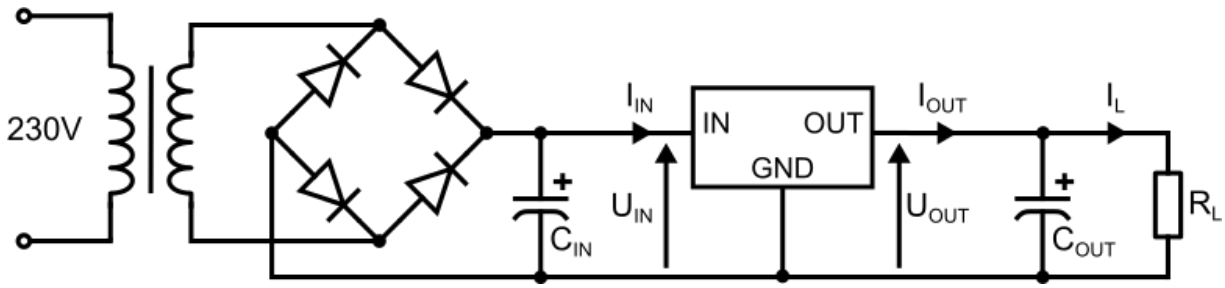

Fig.4.21. Regulated power supply

Transformer and AC Supply

A power supply can be used for providing the necessary amount of power at the precise voltage from the main source like a battery. A transformer alters the AC mains voltage toward a necessary value and the main function of this is to step up and step down the voltage. For instance, a step-down transformer is used in a transistor radio, and a step-up transformer is used in a CRT. Transformer gives separation from the powerline and must be used even as any modify within voltage is not required.

Rectifier

A rectifier is an electrical device used to convert alternating current into direct current. It can be a full wave rectifier as well as half wave rectifier with the help of a transformer by a bridge rectifier otherwise center tapped secondary winding. However, the rectifier's o/p can be variable.

Filter

A filter in the regulated power supply is mainly used for leveling the ac differences from the corrected voltage. Rectifiers are classified into four types of namely capacitor filter, Inductor filter, LC filter & RC filter.

Voltage Regulator

A voltage regulator in the regulated power supply is essential for keeping a steady DC output voltage by supplying load regulation as well as line regulation. For this reason, we can employ regulators like a Zener, transistorized, otherwise 3-terminal integrated regulators. An SMPS-switched mode power supply can be used for supplying huge load current by small power dissipation within the series pass transistor.

Regulated Power Supply Characteristics

The quality of the power supply can be decided by the several factors namely load current, voltage, source and voltage regulation, ripple rejection, output impedance, etc. Some of the factors are explained below.

Lowest Load Resistance

The load-resistance on which a current supply supplies its full-load charged current by rated voltage can be called as the lowest load resistance.

Lowest Load Resistance = Voltage at full load / Current at full load

Line or Source Regulation

In practice, there are significant differences within the AC supply mains voltage. As this in the power supply block diagram, the input voltage is 230 Volts supply voltage is input to the normal power supply, the bridge rectifier's filtered output is approximately directly proportional toward the AC mains voltage. The source regulation can be defined as the modify in regulated output voltage for a particular range of low voltage.

Output Impedance

The output resistance of the regulated power supply is very small. Although the exterior load resistance can be changed, approximately no change can be seen within the load voltage. The o/p impedance of a perfect voltage source is zero.

Ripple Rejection

The voltage regulators fix the output voltage against the input voltage variations. Ripple is equal to a periodic difference within the input voltage. Thus, a voltage regulator satisfies the ripple that approaches with the unregulated input voltage.

Applications of Regulated Power Supply

The applications of the regulated power supply include the following.

- Mobile phone chargers
- Regulated power supplies in different appliances
- Various oscillators & amplifiers

4.3 Working

The circuit consists of Arduino, GSM, LCD, LOADS and Current transformers, energy meter. Current sensing is done by current transformers. CT is used, one is connected at load side to measure the current through load and other is connected at supply terminals to measure the current supplied by source GSM power theft detector kit has been implemented. In the proposed method a Global System for Mobile communication (GSM)based technology is used to transmit the meter reading and detection alert automatically to the authorized energy provider via an alert message which eliminates the various issues related to the meter reading and theft detection.

Current Sensor detects the current in a wire or conductor and generates a signal proportional to the detected current either in the form of analog voltage or digital output. Current Sensing is done in two ways i.e., Direct sensing and Indirect Sensing. In Direct sensing to detect current Ohm's law is used to measure the voltage drop occurred in a wire when current flows through it. A current-carrying conductor also gives rise to a magnetic field in its surrounding. In Indirect Sensing, the current is measured by calculating this magnetic field by applying either Faraday's law or Ampere law. Here either a Transformer or Hall effect sensor or fiberoptic current sensor are used to sense the magnetic field. ACS712 Current Sensor uses Indirect Sensing method to calculate the current. To sense current a liner, low-offset Hall sensor circuit is used in this IC. This sensor is located at the surface of the IC on a copper conduction path. When current flows through this copper conduction path it generates a magnetic field which is sensed by the Hall effect sensor. A voltage proportional to the sensed magnetic field is generated by the Hall sensor, which is used to measure current. The proximity of the magnetic signal to the Hall sensor decides the accuracy of the device. Nearer the magnetic signal higher the accuracy. ACS712 Current Sensor is available as a small, surface mount SOIC8 package. In this IC current flows from Pin-1 and Pin-2 to Pin-3 and Pin-4. This forms the conduction path where the current is sensed. Implementation of this IC is very easy. ACS712 can be used in applications requiring electrical isolation as the terminals of the conduction path are electrically isolated from the GSM power theft detector kit has been implemented. In the proposed method a Global System for Mobile communication (GSM)based technology is used to transmit the meter reading and detection alert automatically to the authorized energy provider via an alert message which eliminates the various issues related to the meter reading and theft detection.

Current Sensor detects the current in a wire or conductor and generates a signal proportional to the detected current either in the form of analog voltage or digital output. Current Sensing is done in two ways i.e., Direct sensing and Indirect Sensing. In Direct sensing to detect current Ohm's law is used to measure the voltage drop occurred in a wire when current flows through it. A current-carrying conductor also gives rise to a magnetic field in its surrounding. In Indirect Sensing, the current is measured by calculating this magnetic field by applying either Faraday's law or Ampere law. Here either a Transformer or Hall effect sensor or fiberoptic current sensor are used to sense the magnetic field. ACS712 Current Sensor uses Indirect Sensing method to calculate the current. To sense current a liner, low-offset Hall sensor circuit is used in this IC. This sensor is located at the surface of the IC on a copper conduction path. When current flows through this copper conduction path it generates a magnetic field which is sensed by the Hall effect sensor. A voltage proportional to the sensed magnetic field is generated by the Hall sensor, which is used to measure current. The proximity of the magnetic signal to the Hall sensor decides the accuracy of the device. Nearer the magnetic signal higher the accuracy. ACS712 Current Sensor is available as a small, surface mount SOIC8 package. In this IC current flows from Pin-1 and Pin-2 to Pin-3 and Pin-4. This forms the conduction path where the current is sensed. Implementation of this IC is very easy. ACS712 can be used in applications requiring electrical isolation as the terminals of the conduction path are electrically isolated from the IC leads. Thus, this IC doesn't require any other isolation techniques. This IC requires a supply voltage of 5V. Its output voltage is proportional to AC or DC current. ACS712 has a nearly zero magnetic hysteresis. Where Pin-1 to Pin-4 forms the conduction path, Pin-5 is the signal ground pin. Pin-6 is the FILTER pin that is used by an external capacitor to set the bandwidth. Pin-7 is the analog output pin. Pin-8 is the power supply pin.

Many electricity consumers try to decrease their electricity bill using many ways. One of them is using industrial machines under domestic energy meter supply. To find it, we can use a current sensor and voltage sensor in the circuit. These sensors will find the voltage and current utilizing by the load in that circuit and send those values to microcontroller, where it compares with the predetermined range of current and voltage readings.

4.31 Load control circuit

If the microcontroller finds that there is tapping detection, it will send SMS to the registered mobile number in the microcontroller, which is an indication for the electricity board about the illegal activities doing by a particular customer. In this project a function is coded, which can switch off the load to that GSM modem number house. Initially, only one load in ON condition and consumes less current than maximum allowed power.

When both loads are in ON condition, Voltage and current sensors are included in the circuit, which will find the current voltage consuming by the loads. If load consumption is higher than fixed range in pic microcontroller while coding, then micro controller sends a command to GSM modem to send an SMS to registered mobile number.

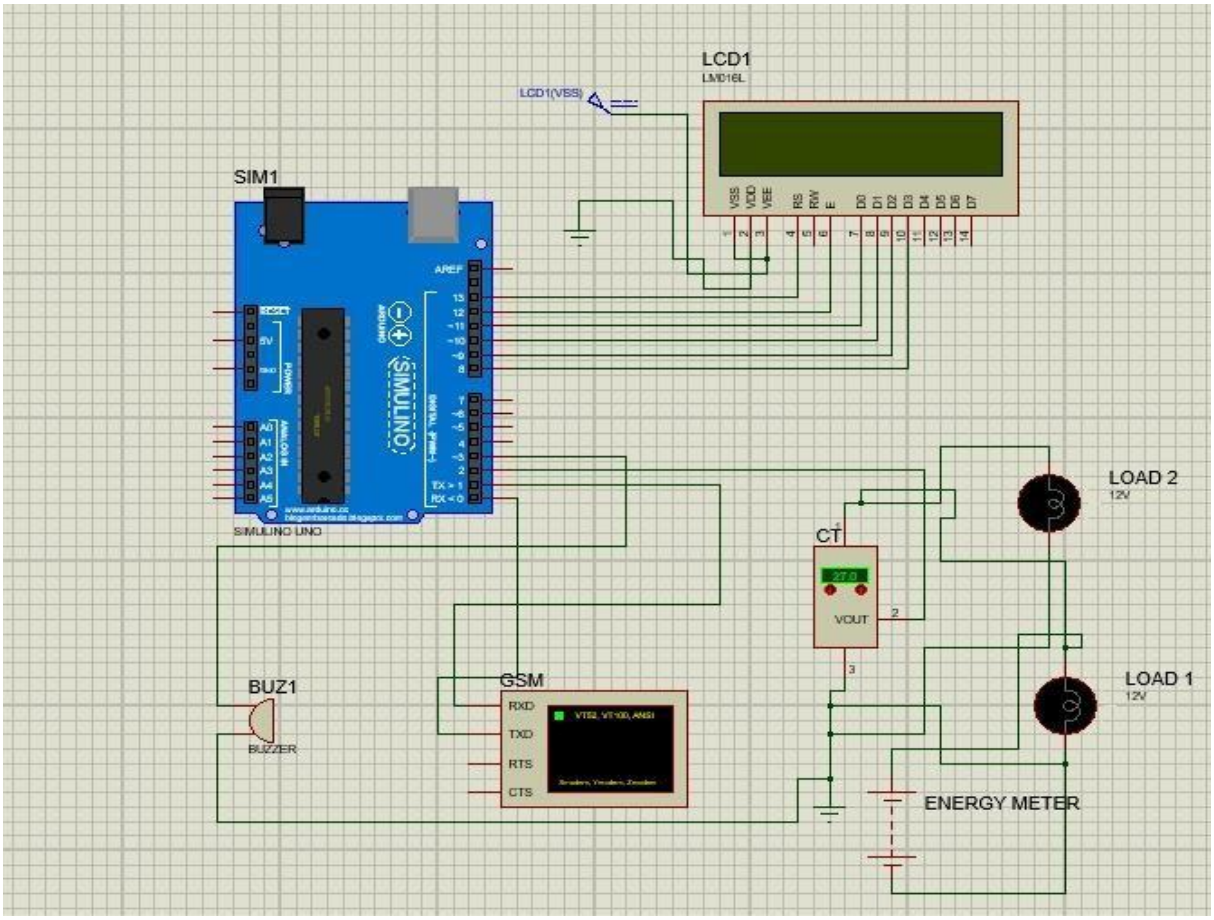

Fig. 4.3. Circuit diagram of energy theft using GSM

4.4. DESCRPTION OF COMPONENTS

4.41 Arduino

The Arduino Uno is a microcontroller board based on the ATmega328. It has 14 digital input/output pins (of which 6 can be used as PWM outputs), 6 analog inputs, a 16 MHz ceramic resonator, a USB connection, a power jack, an ICSP header, and a reset button. It contains everything needed to support the microcontroller; simply connect it to a computer with a USB cable or power it with a AC-to-DC adapter or battery to get started. The Uno differs from all preceding boards in that it does not use the FTDI USB-to-serial driver chip. Instead, it features the Atmega16U2 (Atmega8U2 up to version R2) programmed as a USB-to-serial converter. Revision 2 of the Uno board has a resistor pulling the 8U2 HWB line to ground, making it easier to put into DFU mode. Revision 3 of the board has the following new features:

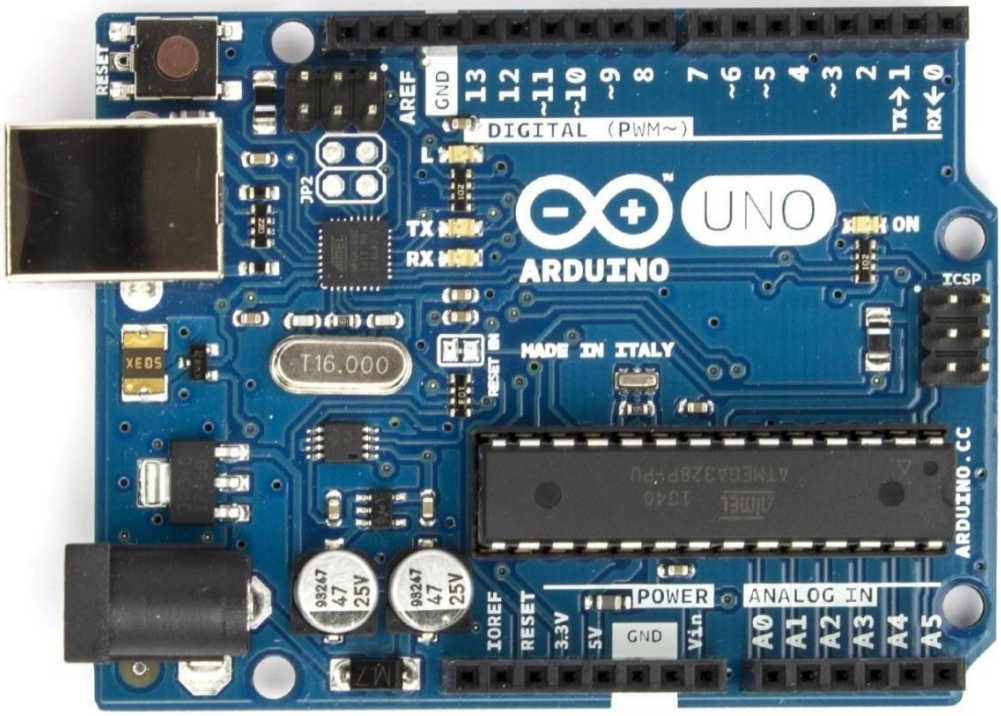

Fig. 4.4. Arduino uno ATmega328

Communication:

The Arduino Uno has several facilities for communicating with a computer, another Arduino, or other microcontrollers. The ATmega328 provides UART TTL (5V) serial communication, which is available on digital pins 0 (RX) and 1 (TX). An ATmega16U2 on the board channels this serial communication over USB and appears as a virtual com port to software on the computer. The '16U2 firmware use the standard USB COM drivers, and no external driver is needed. However, on Windows, a .inf file is required. The Arduino software includes a serial monitor which allows simple textual data to be sent to and from the Arduino board. The RX and TX LEDs on the board will flash when data is being transmitted via the USB- to-serial chip and USB connection to the computer (but not for serial communication on pins 0 and 1). A Software Serial library allows for serial communication on any of the Uno's digital pins. The ATmega328 also supports I2C (TWI) and SPI communication. the standard USB COM drivers, and no external driver is needed. However, on Windows, a .inf file is required. The Arduino software includes a serial monitor which allows simple textual data to be sent to and from the Arduino board. The RX and TX LEDs on the board will flash when data is being transmitted via the USB- to-serial chip and USB connection to the computer (but not for serial communication on pins 0 and 1). A Software Serial library allows for serial communication on any of the Uno's digital pins. The ATmega328 also supports I2C (TWI) and SPI communication.

Each of the 14 digital pins and 6 analog pins on the Uno can be used as an input or output, under software control (using pin Mode(), digitalWrite(), and digitalRead() functions). They operate at 5 volts. Each pin can provide or receive 20 mA as the recommended operating condition and has an internal pull-up resistor (disconnected by default) of 20-50K ohm. A maximum of 40mA must not be exceeded on any I/O pin to avoid permanent damage to the microcontroller. The Uno has 6 analog inputs, labeled A0 through A5; each provides 10 bits of resolution (i.e. 1024 different values). By default, they measure from ground to 5 volts, though it is possible to change the upper end of the range using the AREF pin and the analogReference() function.

4.42 LCD/DISPLAY

Liquid Crystal Display also called as LCD is very helpful in providing user interface as well as for debugging purpose. The most used Character based LCDs are based on Hitachi's HD44780 controller or other which are compatible with HD44580. The most used LCDs found in the market today are 1 Line, 2 Line or 4 Line LCDs which have only 1 controller and support at most of 80 characters, whereas LCDs supporting more than 80 characters make use of 2 HD44780 controllers.

Pin Description:

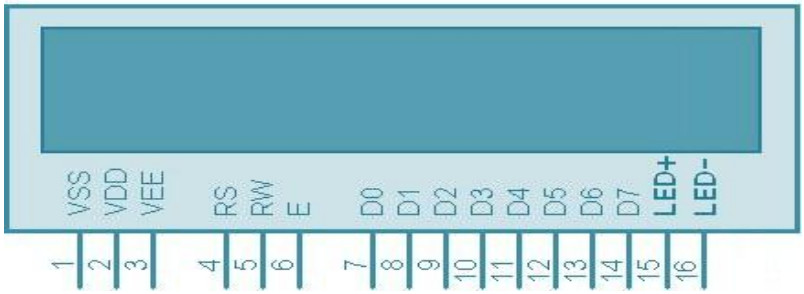

Fig. 4.5. Pin Diagram of LCD

The chemical formula of the liquid crystals used in LCDs may vary. Formulas may be patented. An example is a mixture of 2-(4-alkoxyphenyl)-5-alkylpyrimidine with cyanobiphenyl, patented by Merck and Sharp Corporation. The patent that covered that specific mixture expired. Most colour LCD systems use the same technique, with colour filters used to generate red, green, and blue subpixels. The LCD colour filters are made with a photolithography process on large glass sheets that are later glued with other glass sheets containing a TFT array, spacers and liquid crystal, creating several colour LCDs that are then cut from one another and laminated with polarizer sheets. Red, green, blue and black photoresists (resists) are used. All resists contain a finely ground powdered pigment, with particles being just 40 nanometre’s across. The black resist is the first to be applied; this will create a black grid (known in the industry as a black matrix) that will separate red, green and blue subpixels from one another, increasing contrast ratios and preventing light from leaking from one subpixel onto other surrounding subpixels. After the black resist has been dried in an oven and exposed to UV light through a photomask, the unexposed areas are washed away, creating a black grid. Then the same process is repeated with the remaining resists.

TABLE. 1 Pins description

	Name	Description
1	**VSS**	Power supply (GND)
2	**VCC**	Power supply (+5V)
3	**VEE**	Contrast adjust
4	**RS**	0 = Instruction input 1 = Data input
5	**R/W**	0 = Write to LCD module 1 = Read from LCD module
6	**EN**	Enable signal
7	**D0**	Data bus line 0 (LSB)
8	**D1**	Data bus line 1
9	**D2**	Data bus line 2
10	**D3**	Data bus line 3
11	**D4**	Data bus line 4
12	**D5**	Data bus line 5
13	**D6**	Data bus line 6

14	**D7**	Data bus line 7 (MSB)
15	**LED+**	Back Light VCC
16	**LED-**	Back Light GND

Table. 4.2. Command Operation of LCD

Command	Code										Description	Execution Time
	RS	R/W	DB7	DB6	DB5	DB4	DB3	DB2	DB1	DB0		
Clear Display	0	0	0	0	0	0	0	0	0	1	Clears the display and returns the cursor to the home position (address 0).	82μs~1.64ms
Return Home	0	0	0	0	0	0	0	0	1	*	Returns the cursor to the home position (address 0). Also returns a shifted display to the home position. DD RAM contents remain unchanged.	40μs~1.64ms
Entry Mode Set	0	0	0	0	0	0	0	1	I/D	S	Sets the cursor move direction and enables/disables the display.	40μs
Display ON/OFF Control	0	0	0	0	0	0	1	D	C	B	Turns the display ON/OFF (D), or the cursor ON/OFF (C), and blink of the character at the cursor position (B).	40μs
Cursor & Display Shift	0	0	0	0	0	1	S/C	R/L	*	*	Moves the cursor and shifts the display without changing the DD RAM contents.	40μs
Function Set	0	0	0	0	1	DL	N$	F	*	#	Sets the data width (DL), the number of lines in the display (L), and the character font (F).	40μs
Set CG RAM Address	0	0	0	1	A_{CG}						Sets the CG RAM address. CG RAM data can be read or altered after making this setting.	40μs
Set DD RAM Address	0	0	1	A_{DD}							Sets the DD RAM address. Data may be written or read after making this setting.	40μs
Read Busy Flag & Address	0	1	BF	AC							Reads the BUSY flag (BF) indicating that an internal operation is being performed and reads the address counter contents.	1μs
Write Data to CG or DD RAM	1	0	Write Data								Writes data into DD RAM or CG RAM.	46μs
Read Data from CG or DD RAM	1	1	Read Data								Reads data from DD RAM or CG RAM.	46μs
	I/D = 1: Increment S = 1: Accompanies display shift. S/C= 1: Display shift R/L= 1: Shift to the right. DL = 1: 8 bits N = 1: 2 lines F = 1: 5x10 dots BF = 1: Busy *# Set to 1 on 24x4 modules* *$ With KS0072 is Address Mode.*				I/D = 0: Decrement S/C = 0: cursor move R/L= 0: Shift to the left. DL = 0: 4 bits N = 0: 1 line F = 0: 5 x 7 dots BF = 0: Can accept data						DD RAM: Display data RAM CG RAM: Character generator RAM A_{CG}: CG RAM Address A_{DD}: DD RAM Address Corresponds to cursor address. AC: Address counter Used for both DD and CG RAM address.	Execution times are typical. If transfers are timed by software and the busy flag is not used, add 10% to the above times.

Although looking at the table you can make your own commands and test them. Below is a brief list of useful commands which are used frequently while working on the LCD.

Table.4.3. Command List of LCD

	Instruction	Hex	Decimal
1	Function Set: 8-bit, 1 Line, 5x7 Dots	0x30	48
2	Function Set: 8-bit, 2 Line, 5x7 Dots	0x38	56
3	Function Set: 4-bit, 1 Line, 5x7 Dots	0x20	32
4	Function Set: 4-bit, 2 Line, 5x7 Dots	0x28	40
5	Entry Mode	0x06	6
6	Display off Cursor off (Clearing display without clearing DDRAM content)	0x08	8
7	Display on Cursor on	0x0E	14
8	Display on Cursor off	0x0C	12
9	Display on Cursor blinking	0x0F	15
10	Shift entire display left	0x18	24
12	Shift entire display right	0x1C	30
13	Move cursor left by one character	0x10	16

14	Move cursor right by one character	0x14	20
15	Clear Display (also clear DDRAM content)	0x01	1
16	Set DDRAM address or cursor position on display	0x80+add	128+add
17	Set CGRAM address or set pointer to CGRAM location	0x40+add	64+add

To send commands we simply need to select the command register. Everything is same as we have done in the initialization routine. But we will summarize the common steps and put them in a single subroutine. Following are the steps:

- move data to LCD port
- select command register
- select write operation
- send enable signal
- wait for LCD to process the command
- sending Data to LCD
- to send data move data to LCD port
- select data register
- select write operation.

4.43 GSM

GSM is a mobile communication modem; it is stands for global system for mobile communication (GSM). The idea of GSM was developed at Bell Laboratories in 1970. It is widely used mobile communication system in the world. GSM is an open and digital cellular technology used for transmitting mobile voice and data services operates at the 850MHz, 900MHz, 1800MHz and 1900MHz frequency bands.

GSM system was developed as a digital system using time division multiple access (TDMA) technique for communication purpose. A GSM digitizes and reduces the data, then sends it down through a channel with two different streams of client data, each in its own time slot. The digital system has an ability to carry 64 kbps to 120 Mbps of data rates.

Fig.4.6. GSM module

The coverage area of each cell varies according to the implementation environment. Macro cells can be regarded as cells where the base-station antenna is installed on a mast or a building above average rooftop level. Micro cells are cells whose antenna height is under average rooftop level; they are typically deployed in urban areas. Picocells are small cells whose coverage diameter is a few dozen meters; they are mainly used indoors.

GSM Architecture

A GSM network consists of the following components:

- **A Mobile Station:** It is the mobile phone which consists of the transceiver, the display and the processor and is controlled by a SIM card operating over the network.
- **Base Station Subsystem:** It acts as an interface between the mobile station and the network subsystem. It consists of the Base Transceiver Station which contains the radio transceivers and handles the protocols for communication with mobiles. It also consists of the Base Station Controller which controls the Base Transceiver station and acts as an interface between the mobile station andmobile switching center.
- **Network Subsystem:** of the Network Subsystem is the Mobile Service Switching Centre which provides access to different networks like ISDN, PSTN etc. It also consists of the Home Location Register and the Visitor Location Register which provides the call routing and roaming capabilities of GSM. It provides the basic network connection to the mobile stations. The basicpart

Working of GSM Module:

From the below circuit, a GSM modem duly interfaced to the MC through the level shifter IC Max232. The SIM card mounted GSM modem upon receiving digit command by SMS from any cell phone send that data to the MC through serial communication. While the program is executed, the GSM modem receives command 'STOP' to develop an output at the MC, the contact point of which are used to disable the ignition switch. The command so sent by the user is based on an intimation received by him through the GSM modem 'ALERT' a programmed message only if the input is driven low. The complete operation is displayed over 16×2 LCD display. Sometimes mobile network operators restrict handsets that they sell for exclusive use in their own network. This is called SIM locking and is implemented by a software feature of the phone. A subscriber may usually contact the provider to remove the lock for a fee, utilize private services to remove the lock, or use software and websites to unlock the handset themselves. It is possible to hack past a phone locked by a network operator.

GSM was intended to be a secure wireless system. It has considered the user authentication using a pre-shared key and challenge–response, and over-the-air encryption. However, GSM is vulnerable to different types of attack, each of them aimed at a different part of the network. The development of UMTS introduced an optional Universal Subscriber Identity Module (USIM), that uses a longer authentication key to give greater security, as well as mutually authenticating the network and the user, whereas GSM only authenticates the user to the network (and not vice versa). The security model therefore offers confidentiality and authentication, but limited authorization capabilities, and no non-repudiation.

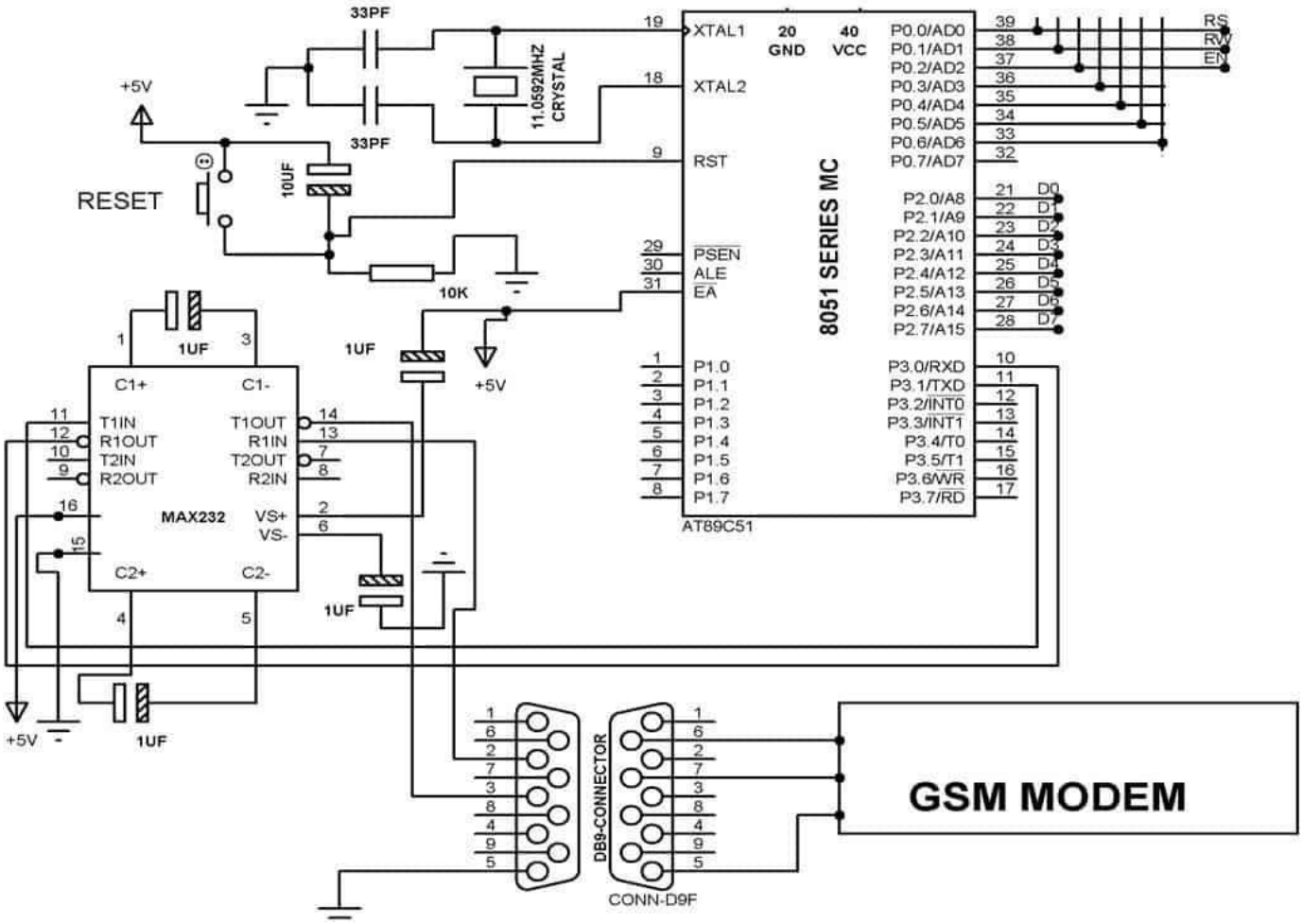

Fig. 4.61. GSM circuit

4.44 ENERGY METER

Energy Meter or Watt-Hour Meter is an electrical instrument that measures the amount of electrical energy used by the consumers. Utilities are one of the electrical departments, which install these instruments at every place like homes, industries, organizations, commercial buildings to charge for the electricity consumption by loads such as lights, fans, refrigerator, and other home appliances.

Fig.4.7. Watt-Hour Meter

The basic unit of power is watts, and it is measured by using a watt meter. One thousand watts make one kilowatt. If one uses one kilowatt in one-hour duration, one unit of energy gets consumed. So, energy meters measure the rapid voltage and currents, calculate their product and give instantaneous power. This power is integrated over a time interval, which gives the energy utilized over that time period.When energy savings during certain periods are desired, some meters may measure demand, the maximum use of power in some interval. "Time of day" metering allows electric rates to be changed during a day, to record usage during peak high-cost periods and off-peak, lower-cost, periods. Also, in some areas meters have relays for demand response load shedding during peak load periods.

Types of Energy Meters

The energy meters are classified into two basic categories, such as:

- Electromechanical Type Induction Meter
- Electronic Energy Meter

The electricity supply connection may be either single phase or three phase depending on the supply utilized by the domestic or commercial installations. Particularly in this article, we are going to study about the working principles of single-phase electromechanical induction type energy meter and about three- phase electronic energy meter from the explanation of two basic energy meters as described below.

Single Phase Electromechanical Induction Energy Meter

It is a well-known and most common type of age-old energy meter. It comprises a rotating aluminum disc placed on a spindle between two electromagnets. The rotation speed of the disc is proportional to the power, and this power is integrated using gear trains and counter mechanism. It is made of two silicon steel laminated electromagnets: shunt and series magnets. Series magnet produces a flux which is proportional to the flowing current, and shunt magnet produces a flux proportional to the voltage. These two fluxes lag at 90 degrees due to inductive nature. The interface of these two fields produces eddy current in the disk, utilizing a force, which is proportional to the product of instantaneous voltage, current and the phase angle between them. A braking magnet is placed over one side of the disc, which produces a braking torque on the disc by a constant field provided by using a permanent magnet. Whenever the braking and driving torques become equal, the speed of the disc becomes steady. A Shaft or vertical spindle of the aluminum disc is associated with the gear arrangement that records a number proportional to the revolutions of the disc. This gear arrangement sets the number in a series of dials and indicates energy consumed over time.

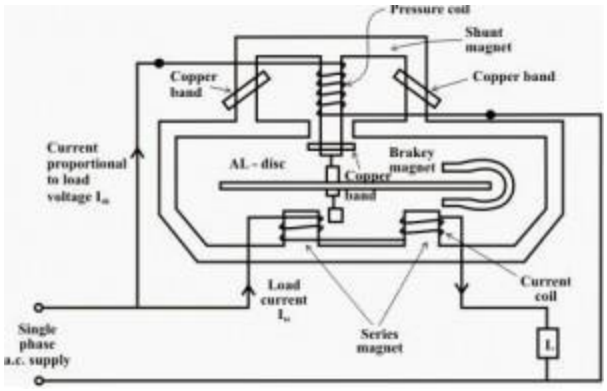

Fig.4.71. Single Phase Electromechanical Induction Energy meter.

This type of energy meter is simple in construction and the accuracy is somewhat less due to creeping and other external fields. A foremost problem with these types of energy meters is their proneness to tampering, which necessitates an electrical- energy-monitoring system. These series and shunt type meters are widely used in domestic and industrial applications. Electronic energy meters are accurate, precise and reliable type of measuring instruments when compared to electromechanical induction type meters. When connected to loads, they consume less power and start measuring instantaneous. So, electronic type of three-phase energy meter is explained below with its working principle.

Energy Meter Circuit Using Microcontroller:

The below figure shows the watt-hour meter circuit implemented by using Atmel AVR microcontroller. This circuit continuously monitors and acquires voltage and current parameters of the mains single phase supply. Microcontroller gets these parameter values from a signal conditioning circuit, which is driven by OP-AMP ICs . This circuit has two current transformers connected in series with each supply line: phase and neutral. The current values from these transformers are sent to the respective ADC of the microcontroller, and then the ADC converts these values to digital values, and thus the microcontroller does necessarily calculations to find the energy consumption.

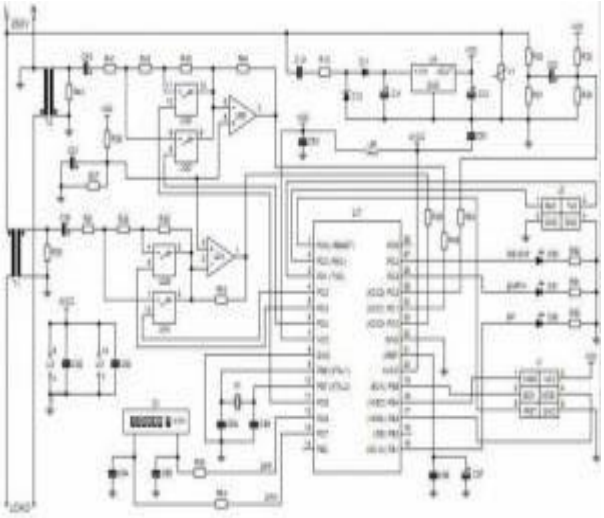

Fig. 4.72. Energy Meter Circuit Using Microcontroller

The Microcontroller is programmed in such a way that the voltage and current values from the ADC are multiplied and integrated over a specified time period, and then correspondingly drive the counter mechanism that displays the number of units consumed (KWs) over a time period.

Electricity meters are required to register the energy consumed within an acceptable degree of accuracy. Any significant error in the registered energy can represent a loss to the electricity supplier, or the consumer being over billed. The accuracy is generally laid down in statute for the location in which the meter is installed. Statutory provisions may also specify a procedure to be followed should the accuracy be disputed. For any installed electricity meter is required to accurately record the consumed energy, but it is permitted to under-read by 3.5%, or over-read by 2.5%. Disputed meters are initially verified with a check meter operating alongside the disputed meter. The final resort is for the disputed meter to be fully tested both in the installed location and at a specialist calibration laboratory. Approximately 93% of disputed meters are found to be operating satisfactorily. A refund of electricity paid for, but not consumed will only be made if the laboratory is able to estimate how long the meter has been misregistering. In addition to the energy measurement, this system also provides earth fault indication in case of any fault or overcurrent that may occur in neutral or earth line and appropriately turns the Light Emitting Diodes indication for earth fault detection as well as for every unit consumption

4.45 CURRENT SENSOR

This is a non-contact version of current monitor and can sense the flow of current in high current appliances from a distance of up to 30 cm. It uses a standard step-down transformer (0-9V, 500mA) as the current sensor. Its secondary winding is left open, while the primary winding ends are used to detect the current. The primary ends of the transformer are connected to a full-wave bridge rectifier comprising diodes D1 through D4. The rectified output is connected to the non-inverting input of IC CA3140 (IC1).

Current sensor circuit

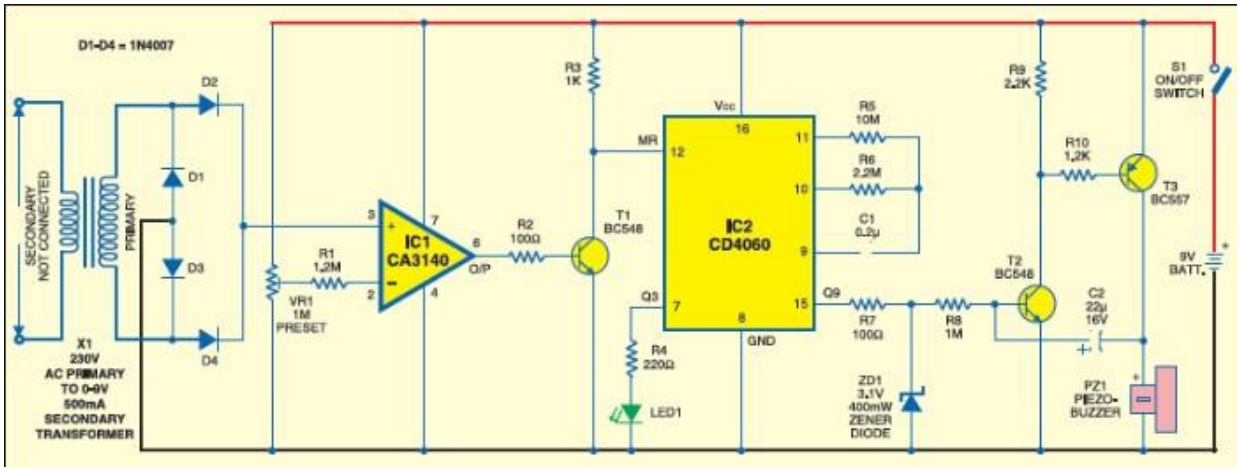

Fig.4.8. Current Sensor Circuit

The inverting input of IC 1 is preset with VR1. In the standby mode, the primary of the transformer accepts e.m.f from the instrument or surrounding atmosphere, which results in low-voltage input to IC1. This low voltage at the non-inverting input keeps the output of IC1 low. Thus, transistor T1 doesn't conduct and pin 12 of IC2 goes high to disable IC2. As a result, the remaining part of the circuit gets inactivated. The Hall element is the basic magnetic field sensor. It requires signal conditioning to make the output usable for most applications. The signal conditioning electronics needed are an amplifier stage and temperature compensation. Voltage regulation is needed when operating from an unregulated supply. If the Hall voltage is measured when no magnetic field is present, the output should be zero. However, if voltage at each output terminal is measured with respect to ground, a non-zero voltage will appear.

Circuit operation

When a high-current appliance is switched on, there will be a current drain in the primary of the transformer to the negative rail due to an increase in the e.m.f. caused by the flow of current through the appliance. This results in voltage rise at the non- inverting input and the output of IC1 becomes high. This high output drives transistor T1 into conduction and the reset pin of IC2 becomes low, which enables IC2.

IC CD4060 (IC2) is a 14-stage ripple counter. It is used as a 15-minute timer by feeding Q9 output to the piezo buzzer for aural alarm through the intermediate circuitry. Resistors R5 and R6 along with capacitor C1 maintain the oscillations in IC2 as indicated by blinking LED1. The high output from IC2 is used to activate a simple oscillator comprising transistors T2 and T3, resistors R8 and R10, and capacitor C2. It is possible to build structures in which the electrical resistance varies as a function of applied magnetic field. These structures can be used as magnetic sensors. Normally these resistors are assembled in a bridge configuration to compensate for thermal drift.[7] Popular magneto resistance-based sensors are: Anisotropic Magneto Resistance (AMR), Giant Magneto Resistance (GMR), Giant Magneto Impendence (GMI) and Tunnel Magneto Resistance (TMR). All these MR-based sensors have higher sensitivity compared to Hall-effect sensors. Despite this, these sensors (GMR, CMR, and TMR) are still more expensive than Hall-effect devices, have serious drawbacks related with nonlinear behavior, distinct thermal drift, and a very strong external field can permanently alter the sensor behavior (GMR). GMI and TMR sensors are even more sensitive than GMR based sensors, and are now in volume production at a few manufacturers. Drawbacks of saturable inductor technologies include limited bandwidth for simpler design, relatively high secondary power consumption, and risk of current or voltage noise injection into the primary conductor.

4.46 LOAD

When working with power electronics, quite often the right piece of test equipment is an old-fashioned incandescent lamp. They make good ballast resistors and dummy loads for a variety of devices. A 100W bulb starts at about 10Ω when cold and works its way up to about 150Ω, so they even adapt well to a wide range of voltages. Plus, they are cheap, available in a several values and plan was to simply mount all these parts to a board and get back to work on power supply. The problem was that the binding posts expect rear connections. The light sockets are more flexible, but they do allow rear wiring. Some applications use the heat generated by the filament. Heat lamps are made for uses such as incubators, lava lamps, and the Easy-Bake Oven toy. Quartz tube halogen infrared heaters are used for industrial processes such as paint curing or for space heating.

Incandescent bulbs typically have short lifetimes compared with other types of lighting; around 1,000 hours for home light bulbs versus typically 10,000 hours for compact fluorescents and 20,000–30,000 hours for lighting LEDs. Most incandescent bulbs can be replaced by fluorescent lamps, high-intensity discharge lamps, and light-emitting diode lamps (LED). Some areas have implemented phasing out the use of incandescent light bulbs to reduce energy consumption.

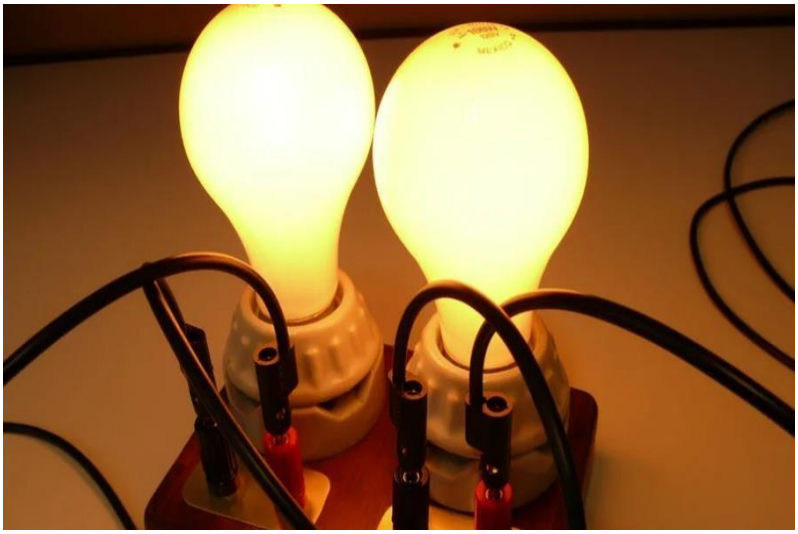

Fig.4.9. Load bulb

4.47 Relay

A Relay is a simple electromechanical switch. While we use normal switches to close or open a circuit manually, a Relay is also a switch that connects or disconnects two circuits. But instead of a manual operation, a relay uses an electrical signal to control an electromagnet, which in turn connects or disconnects another circuit.

Fig.4.91. Relay

Relays can be of different types like electromechanical, solid state. Electromechanical relays are frequently used. Let us see the internal parts of this relay before knowing about it working. Although many different types of relays were present, their working is same.
Every electromechanical relay consists of an consists of an

1. Electromagnet
2. Mechanically movable contact
3. Switching points and
4. Spring

Electromagnet is constructed by wounding a copper coil on a metal core. The two ends of the coil are connected to two pins of the relay as shown. These two are used as DC supply pins. Generally, two more contacts will be present, called as switching points to connect high ampere load. Another contact called common contact is present in order to connect the switching points. These contacts are named as normally open (NO), normally closed (NC) and common (COM) contacts. We can use a Relay either in an AC circuit or a DC Circuit. In case of AC relays, for every current zero position, the relay coil gets demagnetized and hence there would be a chance of continues breaking of the circuit. So, AC relays are constructed with special mechanism such that continuous magnetism is provided in order to avoid above problem. Such mechanisms include electronic circuit arrangement or shaded coil mechanism.

High-voltage or high-current devices can be controlled with small, low voltage wiring and pilots switches. Operators can be isolated from the high voltage circuit. Low power devices such as microprocessors can drive relays to control electrical loads beyond their direct drive capability. In an automobile, a starter relay allows the high current of the cranking motor to be controlled with small wiring and contacts in the ignition key.

The use of relays for the logical control of complex switching systems like telephone exchanges was studied by Claude Shannon, who formalized the application of Boolean algebra to relay circuit design in A Symbolic Analysis of Relay and Switching Circuits. Relays can perform the basic operations of Boolean combinatorial logic. For example, the boolean AND function is realised by connecting normally open relay contacts in series, the OR function by connecting normally open contacts in parallel. Inversion of a logical input can be done with a normally closed contact. Relays were used for control of automated systems for machine tools and production lines. The Ladder programming language is often used for designing relay logic networks.

Early electro-mechanical computers such as the ARRA, Harvard Mark II, Zuse Z2, and Zuse Z3 used relays for logic and working registers. However, electronic devices proved faster and easier to use.

Because relays are much more resistant than semiconductors to nuclear radiation, they are widely used in safety-critical logic, such as the control panels of radioactive waste-handling machinery. Electromechanical protective relays are used to detect overload and other faults on electrical lines by opening and closing circuit breakers.

4.48 ARDUINO SOFTWARE

Arduino IDE (Integrated Development Environment) is required to program the Arduino Uno board.

Programming Arduino

Once Arduino IDE is installed on the computer, connect the board with computer using USB cable. Now open the Arduino IDE and choose the correct board by selecting Tools>Boards>Arduino/Genuino Uno and choose the correct Port by selecting Tools>Port. Arduino Uno is programmed using Arduino programming language based on Wiring. To get it started with Arduino Uno board and blink the built-in LED, load the example code by selecting Files>Examples>Basics>Blink. Once the example code (also shown below) is loaded into your IDE, click on the 'upload' button given on the top bar. Once the upload is finished, you should see the Arduino's built-in LED blinking.

The Arduino integrated development environment (IDE) is a cross-platform application (for Microsoft Windows, macOS, and Linux) that is written in the Java programming language. It originated from the IDE for the languages Processing and Wiring. It includes a code editor with features such as text cutting and pasting, searching and replacing text, automatic indenting, brace matching, and syntax highlighting, and provides simple one-click mechanisms to compile and upload programs to an Arduino board. It also contains a message area, a text console, a toolbar with buttons for common functions and a hierarchy of operation menus. The source code for the IDE is released under the GNU General Public License, version 2. The Arduino IDE supports the languages C and C++ using special rules of code structuring. The Arduino IDE supplies a software library from the Wiring project, which provides many common input and output procedures. User-written code only requires two basic functions, for starting the sketch and the main program loop, that are compiled and linked with a program stub main() into an executable cyclic executive program with the GNU toolchain, also included with the IDE distribution. The Arduino IDE employs the program avrdude to convert the executable code into a text file in hexadecimal encoding that is loaded into the Arduino board by a loader program in the board's firmware.

SOFTWARE:

```
#include <LiquidCrystal.h>

#include <stdio.h>

#include <SoftwareSerial.h>

LiquidCrystal lcd(13, 12, 11, 10, 9, 8);

SoftwareSerial mySerial(2, 3);

#define BUZ  7

int LEDPin = 5 ;

int LEDPin1 = 6 ;

const int S1 = A2;

int sensorPin1 = A0;

int sensorPin2 = A1;

int units=0,amount=0;

// defines pins numbers

//New GPS GY-GPS6MV2

String textMessage;

int dist1,dist2,dist3,sts1=0;

long duration;

int distanceCm, distanceInch;

char lvls='x'

int memsx=0,memsy=0;

int hbtc=0,hbtc1=0,rtrl=0;

unsigned char rcv,count,
gchr='x',gchr1='x',robos='s';
char rcvmsg[10],pastnumber[11];
```

```
//char pastnumber1[11],pastnumber2[11];//pastnumber3[11];
char gpsval[50];
// char dataread[100] = "";
// char lt[15],ln[15];
int i=0,k=0,lop=0;
int gps_status=0; float
latitude=0; float
logitude=0; String
Speed=""; String
gpsString="";
char *test="$GPRMC";
//int hbtc=0,hbtc1=0,rtrl=0;

unsigned char gv=0,msg1[10],msg2[11];
float lati=0,longi=0;
unsigned int lati1=0,longi1=0;
unsigned char flat[5],flong[5];
unsigned char finallat[8],finallong[9];

int ii=0,rchkr=0;
float tempc=0,weight=0;
float vout=0;

int sti=0;
String inputString = "";          // a string to hold incoming data
boolean stringComplete = false; // whether the string is complete
```

```
void okcheck()
   {
unsigned char rcr;

do{

rcr = mySerial.read();

}while(rcr != 'K');

}

   /*
void beep()
{
digitalWrite(buzzer,HIGH);delay(1000);delay(1000);digitalWrite(buzzer,LOW);
}*/

 void setup()
{

   // unsigned char rcr; pinMode(BUZ,

     OUTPUT);

     pinMode(LEDPin,OUTPUT);

     pinMode(LEDPin1,OUTPUT);

     digitalWrite(LEDPin,LOW);

     digitalWrite(LEDPin1,LOW);

     digitalWrite(BUZ,LOW);

     lcd.setCursor(0,0);

     lcd.print("ENERGY TAPPING");

     lcd.setCursor(0,1);

     lcd.print("DETECT USE GSM");

     Serial.println("Initializing...");

     gsminit();
```

```
  delay(1500);
   lcd.clear();
serialEvent();
}
char memss='x';
void loop()
{
  int SW1 = digitalRead(S1); // read new state
  int statusSensor1 ;
  int statusSensor2 ;
  lcd.setCursor(0,0);
  lcd.print("U:");
  lcd.setCursor(0,1);
  lcd.print("A:");;
  delay(1000);
     Serial.println(statusSensor2);
     Serial.println("\n");
     digitalWrite(LEDPin,HIGH);
     digitalWrite(LEDPin1,HIGH);
if(statusSensor1==LOW&&statusSensor2==HIGH)
{
    units++;

 amount = (units * 2);
lcd.setCursor(3,0);convertl(units);
lcd.setCursor(3,1);convertl(amount);
delay(2000);
```

```
  if(units % 3 == 0)
    {
  mySerial.write("AT+CMGS=\"");
  mySerial.write(pastnumber);
  mySerial.write("\"\r\n"); delay(3000);
  mySerial.write("Billing Units:");converts(units);
  mySerial.write(" Amount:");converts(amount);
  mySerial.write(0x1A);delay(4000);delay(4000);
  lcd.clear();
    }
  }
  if(statusSensor1==HIGH&&statusSensor2==HIGH)
 {
  lcd.setCursor(4,0);lcd.print("0");
   lcd.setCursor(4,1);lcd.print("0");
   delay(2000);
   lcd.clear();
 }
 if(statusSensor1==LOW&&statusSensor2==LOW)
{
   delay(6000);
    lcd.clear();
    lcd.print("ENERGY THEFT");
    delay(1000);
    lcd.setCursor(0, 1);
    lcd.print("ALERT..... ");
  digitalWrite(BUZ,HIGH)
```

```
        digitalWrite(LEDPin,LOW);

       digitalWrite(LEDPin1,LOW);

          delay(1500);

      digitalWrite(BUZ,LOW);

      mySerial.write("AT+CMGS=\"");

      mySerial.write(pastnumber);

      mySerial.write("\"\r\n"); delay(3000);

      mySerial.write("ENERGY THEFT DETECTED ALERT..");

      mySerial.write(0x1A);delay(4000);delay(4000);

      lcd.clear();

   }

 delay(1000);
if(mySerial.available()>0){ textMessage =

mySerial.readString();

Serial.print(textMessage);

      delay(10);

     }

if(textMessage.indexOf("STATE")>=0){ Seria

l.write("AT+CMGS=\"");

         Serial.write(pastnumber);

         Serial.write("\"\r\n"); delay(2500);

         Serial.write("Location: ");

         Serial.write(0x1A); delay(4000);  delay(4000);

     }
```

```
    if(textMessage.indexOf("ON")>=0)
    {

      // Turn on relay and save current state

Serial.println("Relay set to ON");

textMessage = "";

    }
if(textMessage.indexOf("OFF")>=0){

// Turn off relay and save current state

Serial.println("Relay set to OFF");

textMessage = "";

    }
if(textMessage.indexOf("A")>=0){

// Turn on relay and save current state

Serial.println("A");

textMessage = "";

}

    if(textMessage.indexOf("B")>=0){

// Turn off relay and save current state

Serial.println("B");

textMessage = "";

    }
        delay(500);

   }
void serialEvent()
  {
while (mySerial.available())

          {

char inChar = (char)mySerial.read();

            //sti++;

   //inputString += inChar
```

```
            if(inChar == '*')
             {sti=1;
              inputString += inChar;
             // stringComplete = true;
             // gchr = inputString[sti-1]
             }
           if(sti == 1)
             {
           inputString += inChar;
             }
           if(inChar == '#')
             {sti=0;
              stringComplete = true;
             }
         }
         }
  int readSerial(char result[])
  {
    int i = 0;
    while (1)
{
while (mySerial.available() > 0)
      {
        char inChar = mySerial.read();
        if (inChar == '\n')
        {
result[i] = '\0';
mySerial.flush(); return
0;
```

```
}
if (inChar != '\r')
{
result[i] = inChar; i++;

}

}
}
}
int readSerial1(char result[])
{
int i = 0;

while (1)

{

while (mySerial.available() > 0)
{
char inChar = mySerial.read(); if

(inChar == '*')

{

result[i] = '\0';

mySerial.flush(); return

0;

}

if (inChar != '*')
{
result[i] = inChar; i++;

}

}

}

}

  void gsminit()

  {
```

```
Serial.print("MOBILE NUMBER");
lcd.clear();
    lcd.print("SEND MSG STORE");
    lcd.setCursor(0,1);
    lcd.print("MOBILE NUMBER");
    do{
      rcv = mySerial.read();
     }while(rcv != '*');
      readSerial(pastnumber);
      pastnumber[10]='\0';
      Serial.print(pastnumber);
      lcd.clear();
      lcd.print(pastnumber);
     delay(3000);     delay(4000);  delay(4000);
     lcd.clear();
    //delay(1000);
  }
  void converts(unsigned int value)
  {
  unsigned int a,b,c,d,e,f,g,h;
a=value/10000;
b=value%10000;
c=b/1000; d=b%1000;
e=d/100;
f=d%100;
g=f/10;
h=f%10;
a=a|0x3
```

```
c=c|0x30;
e=e|0x30;
g=g|0x30;
h=h|0x30;
  }
  void convertl(unsigned int value)
  {
    unsigned int a,b,c,d,e,f,g,h;
a=value/10000;
b=value%10000;
c=b/1000; d=b%1000;
e=d/100;
f=d%100;
g=f/10;
h=f%10;
a=a|0x30;
c=c|0x30;
e=e|0x30;
g=g|0x30;
h=h|0x30;
}
```

4.5 EXPERIMENTAL SETUP

Fig.4.92. Experimental set

Chapter 5

RESULT AND DISCUSSION

Fig. 5.1. Display of energy tapping identifier.

NOTE:

Fig 5.1 describes about the in-detail display of the LCD during three different modes

- Units consumed by the users through energy meter is displayed.
- Mobile number initialization to GSM displayed on LCD.
- Energy theft indication alert on LCD.

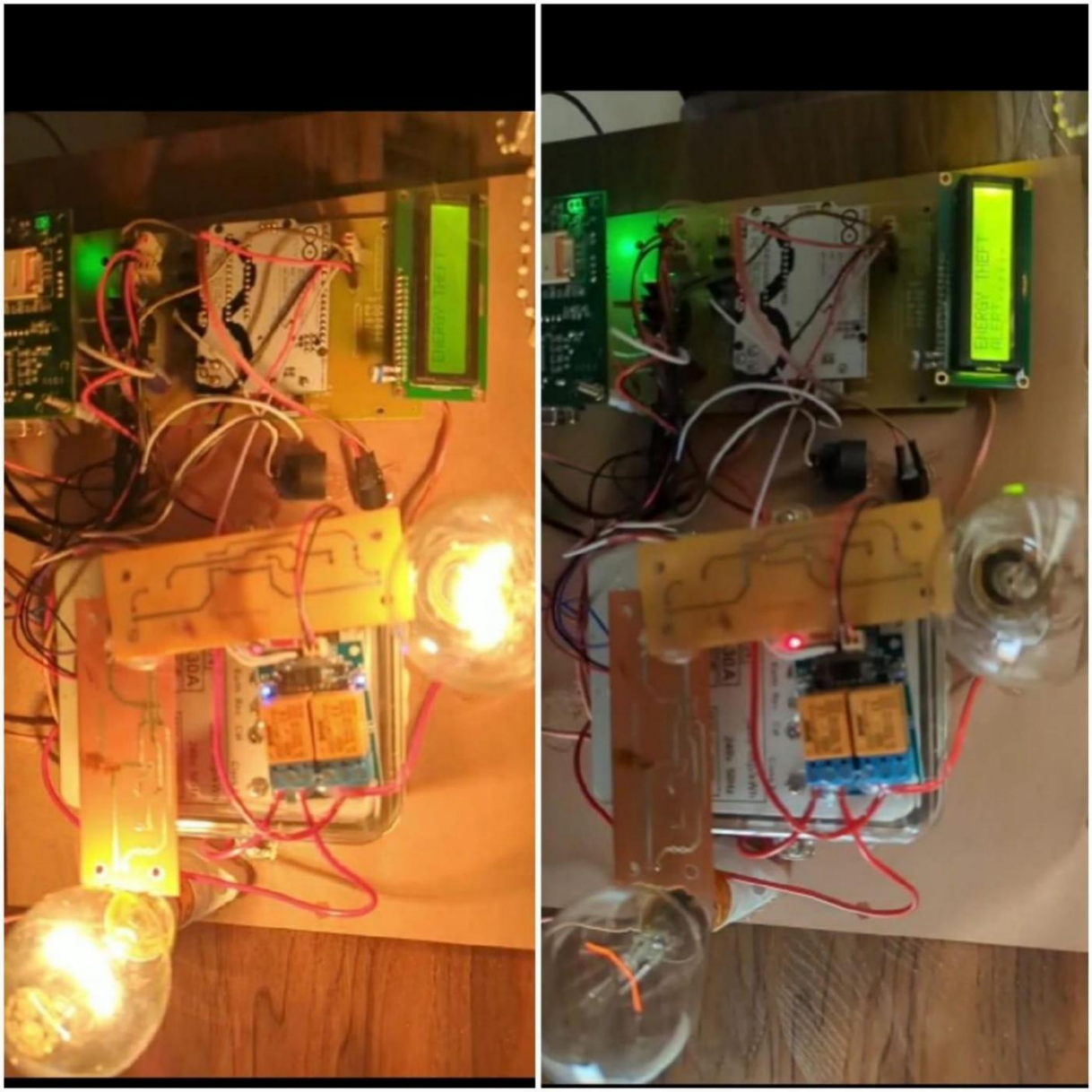

(a) **(b)**

Fig. 5.2. (a) When both theft and normal load is on
(b) Tripping the circuit during theft load

NOTE:

Fig 5.2 defines working of energy theft identifier.

- When normal load is on the units consumed is shown in LCD.
- As the tapping takes place entire circuit trips and send alert through GSM & buzzer.

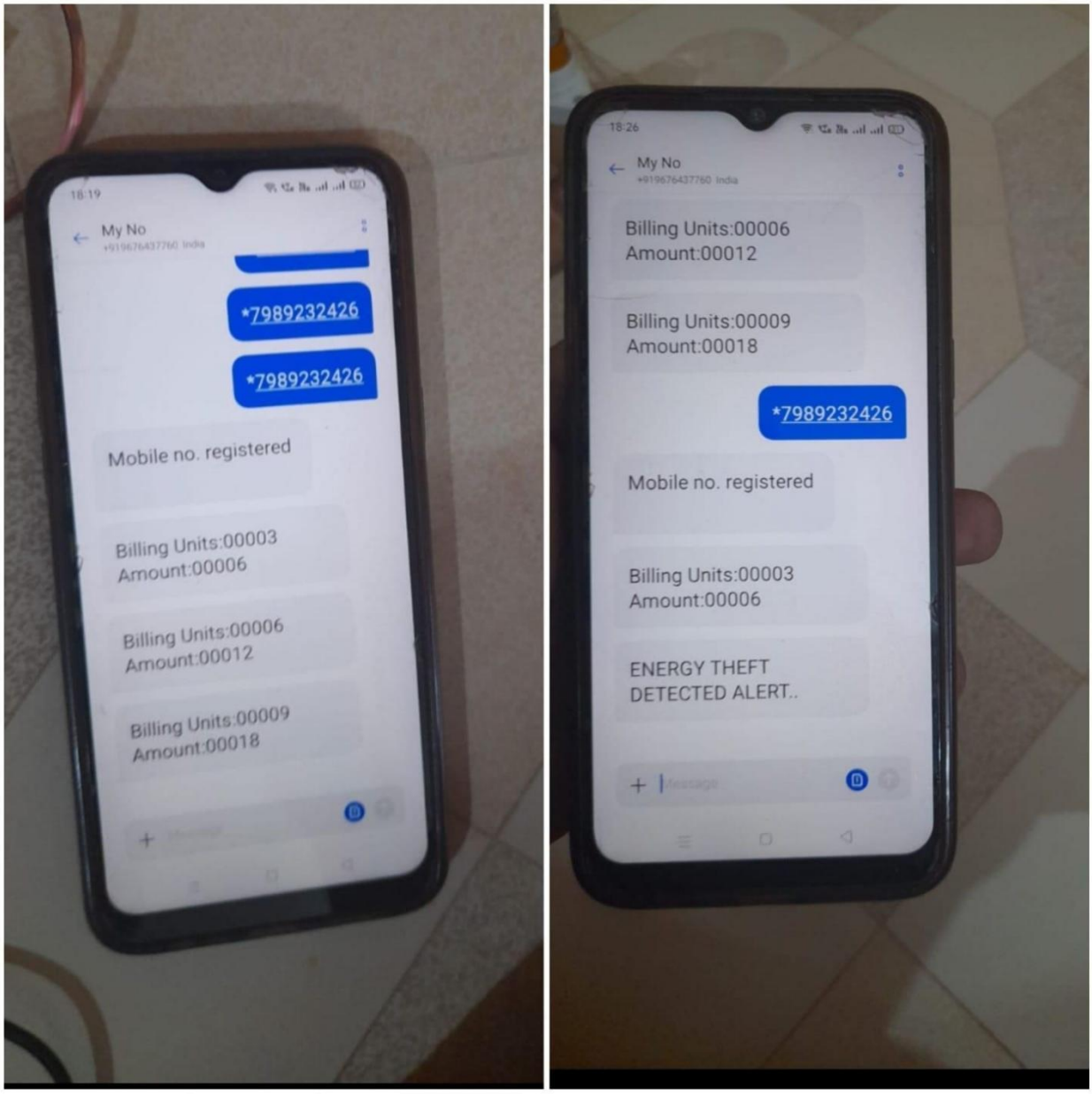

Fig. 5.3. Billing and SMS alert during theft.

NOTE:

Fig 5.3 shows the mobile message alert

- Units consumed and tapping alert is coordinated through GSM and mobile number.

Chapter 6

CONCLUSION AND FUTURESCOPE

CONCLUSION

A hardware project is developed to monitor the electricity using this circuit in an energy meter. Without any human interference, this project automatically detects theft line. This project helps to reduce the manpower by automatic monitoring by the microcontroller .This create a easy approach to detect the problems in installed area .The time of action to clear the problem will be reduced using these project and accuracy meter readings can provided.

FUTURE SCOPE

In the future, this venture can be actualized and approved in remote ranges. Future upgrades can be consolidated to suit the System for three stage electric conveyance System in India. Alongside this new design segments can be consolidated, with the goal that the System can be totally utilized for upgrading the vitality utilization. This strategy will decrease the vitality wastage and spare a considerable measure of vitality for some time later. Rather than utilizing remote information transmission strategy, one can utilize control line correspondence. In control line correspondence information flag is tweaked on control flag and sent it through a same electrical dispersion organizes. This will diminish the cost for correspondence line. Calculated values corresponding to line where the project is initialized can be helpful in calculating the required load flow analysis for future expansion power system network using the information of units consumed by particular line over time period.

APPENDICES

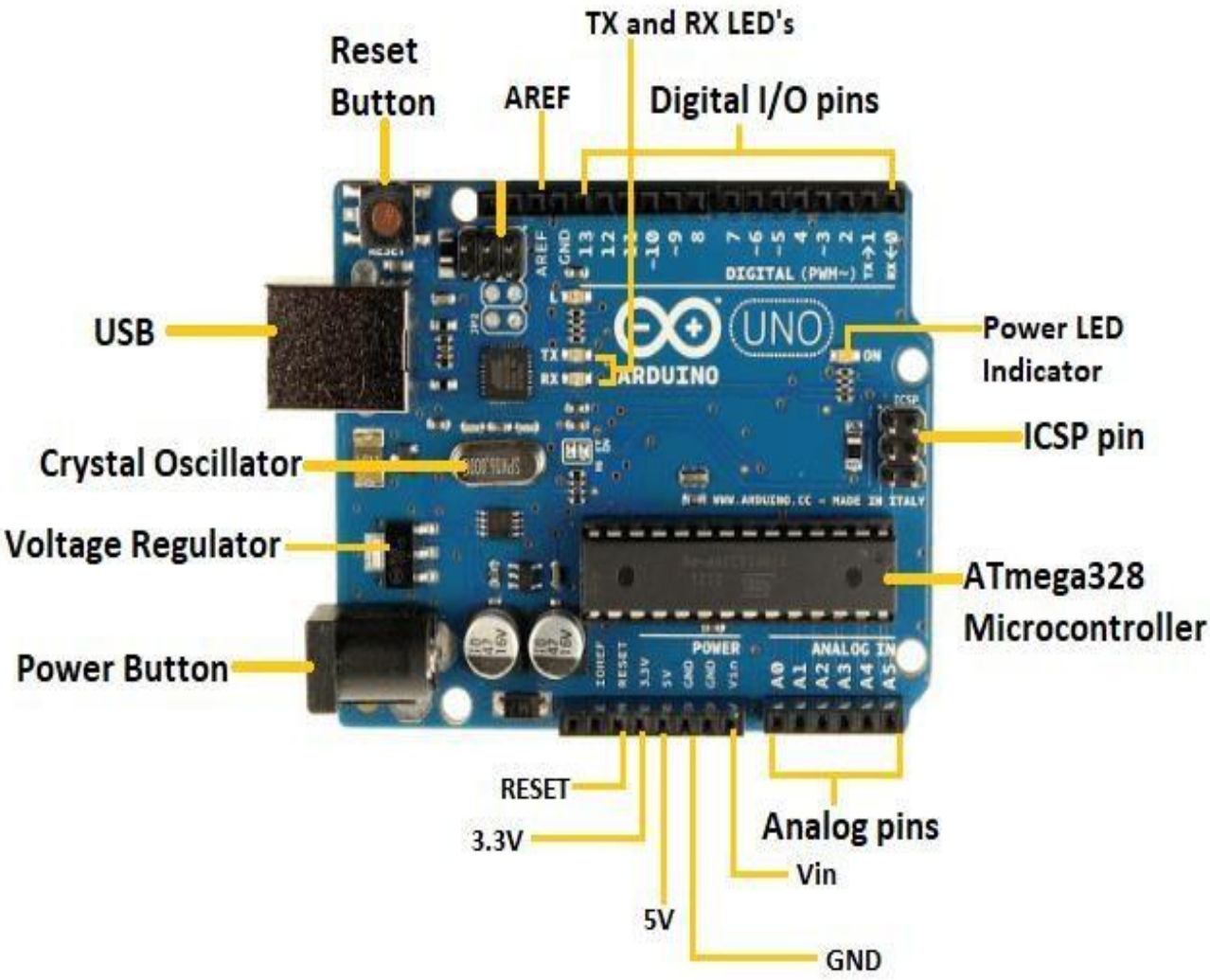

Fig. 6.1. Arduino ATmega328 specifications.

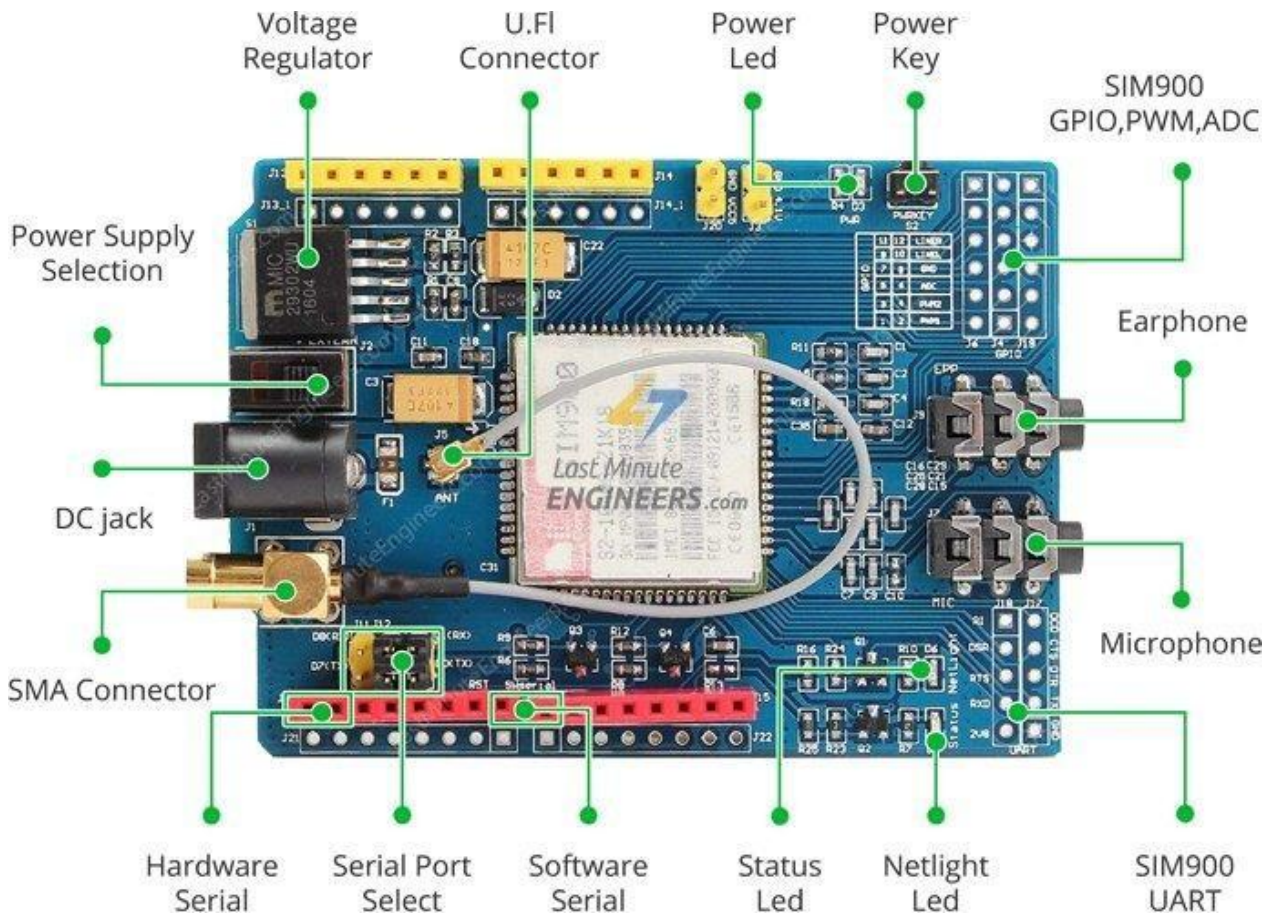

Fig. 6.2. GSM 900 specifications.

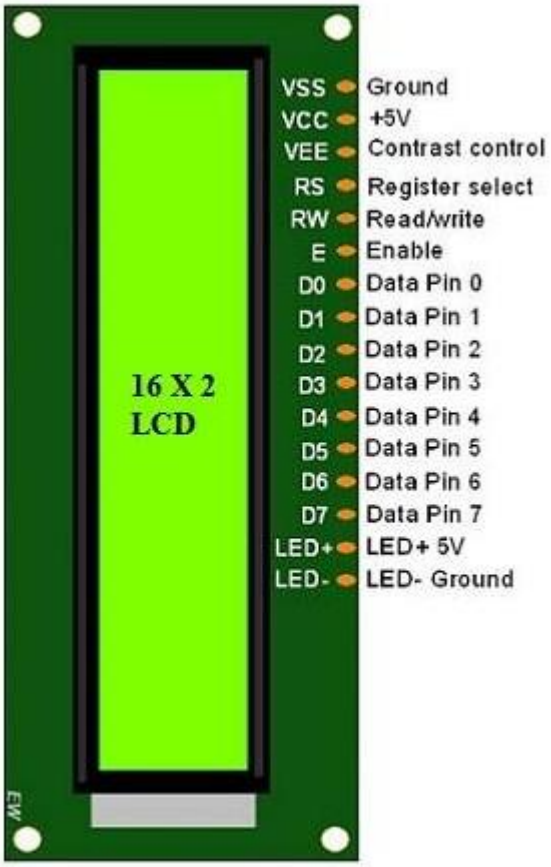

Fig. 6.3. LCD 16 x2 specifications.

REFERENCES

[1] G.L. Prashanthi and K.V. Prasad., "Wireless Power Meter Monitoring with a Power Theft Detection and Intimation System Using GSM and Zigbee Networks", IOSR Journals of Electronics and Communication Engineering(IOSR - JECE), vol. 9, issue 6.

[2] N. P.Wandhare, S.D.Kondra, K.H . Gulhane and K.J.Dave, "Automatic Load Balance and Theft Detection System",International Journal of Application or Innovation in the Engineering & Management(IJAIEM).

[3] F. Jamil, "Comparison of Electricity Supply and Tariff Rates in South Asian Countries." Available at: http://www.efsl.lk/reports/electricity_supply_south_asian_countries.pdf [Accessed 18th July 2014], 2011.

[4] P. Ranjan, N.Mehra, T.A.More and S.Bokand,"Wireless Design for Power Theft Monitoring", International Journal of Computer Technology and Electronics & Engineering(IJCTEE),Vol. 2, Issue 2,pp. 119-122.

[5] P.R.Malhotra and R.Seethalakshmi, "Automatic Meter Reading and Theft Control System by Using GSM",International Journal of Engineering and Technology(IJET),Vol 5,No 2, pp. 806-810, Apr – May 2013.

[6] R. Kalaivani, M. Gowthami, S. Savitha, N. Karthik and S. Mohanvel, "GSM BasedElectricity Theft Identification in Distribution Systems", International Journal of Engineering Trends and Technology(IJETT),Vol 8,No 10, pp. 512 – 516, Feb 2014